SHARP SERVICE MANUAL

CODE : 00ZXEA202VSME

ELECTRONIC CASH REGISTER

MODEL XE-A202

(V version)

CONTENTS

CHAPTER 1. SPECIFICATIONS 1

CHAPTER 2. OPTIONS 5

CHAPTER 3. MASTER RESET AND PROGRAM RESET. 5

CHAPTER 4. HARDWARE DESCRIPTION 6

CHAPTER 5. TEST FUNCTION 12

CHAPTER 6. IPL (INITIAL PROGRAM LOADING) FUNCTION. . . . 15

CHAPTER 7. CAUTION TO BE USED WHEN CONNECTING THE RS-232 CABLE 16

CHAPTER 8. CIRCUIT DIAGRAM AND PWB LAYOUT 17

Parts marked with "⚠" are important for maintaining the safety of the set. Be sure to replace these parts with specified ones for maintaining the safety and performance of the set.

SHARP CORPORATION

This document has been published to be used for after sales service only.
The contents are subject to change without notice.

CHAPTER 1. SPECIFICATIONS

1. APPEARANCE

■**Front view**

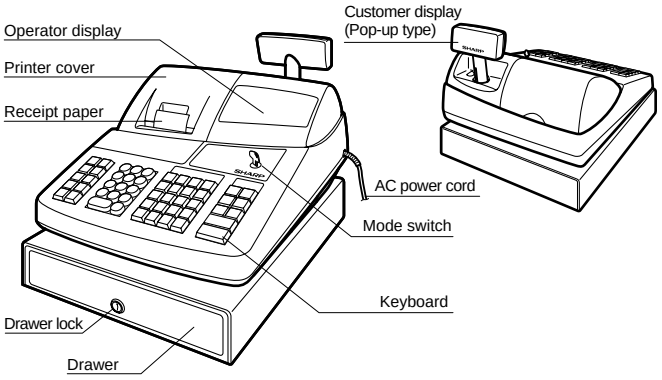

■**Rear view**

■**Printer**

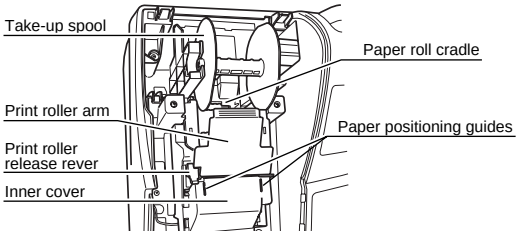

2. RATING

	XE-A202
Weight	11.3kg
Dimensions	421 (W) x 429 (D) x 305 (H) mm
Power source	220V~230V (±10%) 50/60Hz 230V~240V (±10%) 50Hz
Power consumption	220V~230V: Stand-by 8.8W Operating 35W (max) 230V~240V: Stand-by 9.2W Operating 36W (max)
Working temperature	0°C~40°C (32°F to 104°F)

3. KEYBOARD

1) KEYBOARD LAYOUT

Type	Normal keyboard
Key position	STD/MAX 52
Key pitch	19 (W) x 19 (H) mm
Key layout	Fixed type

2) KEY LIST

■**Keyboard layout**

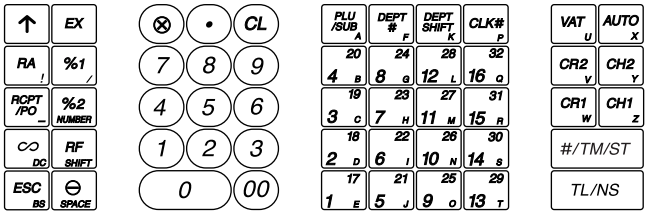

Note: The small characters on the bottom or lower right in each key indicates functions or characters which can be used for character entries for text programming.

■**Key names**

KEY TOP	DESCRIPTION
↑	Paper feed key
RA	Received-on account key
RCPT/PO	Receipt print/Paid-out key
∞	Void key
ESC	Escape key
EX	Foreign currency exchange key
%1, %2	Percent 1 and 2 keys
RF	Refund key
⊖	Discount key
⊗	Multiplication key
•	Decimal point key
CL	Clear key
00, 0~9	Numeric keys
PLU/SUB	PLU/Subdepartment key
DEPT #	Department code entry key
DEPT SHIFT	Department shift key
CLK#	Clerk code entry key
1-17~16-32	Department keys
VAT	Value added tax key
AUTO	Automatic sequence key
CR1, CR2	Credit 1 and 2 keys
CH1, CH2	Cheque 1 and 2 keys
#/TM/ST	Non-add code/Time display/Subtotal key
TL/NS	Total/No sale key

4. MODE SWITCH

1) LAYOUT

• Rotary type

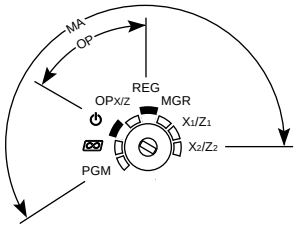

Manager key (MA)

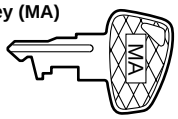

Operator key (OP)

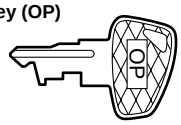

The mode switch can be operated by inserting one of the two supplied mode keys - manager (MA) and operator (OP) keys. These keys can be inserted or removed only in the “REG” or “OFF” position.

The mode switch has these settings:

⏻: This mode locks all register operations. (AC power turns off.) No change occurs to register data.

OP X/Z: To take individual clerk X or Z reports, and to take flash reports.

It can be used to toggle receipt state “ON” and “OFF” by pressing he [RCPT/PO] key.

REG: For entering sales.

PGM: To program various items.

∞: Enters into the void mode. This mode allows correction after finalizing a transaction.

MGR: For manager’s entries. The manager can use this mode for an override entry.

X1/Z1: To take the X/Z report for various daily totals.

X2/Z2: To take the X/Z report for periodic (weekly or monthly) consolidation.

5. DISPLAY

1) OPERATOR DISPLAY

Display device : LED numeric display

Number of line : 1 line

Number of positions : 10 positions numeric display

Color of display : Yellow / Green

Character form : 7 segment + DP

Character size : Numeric 14.2 (H) x 7.9 (W) mm

Layout:

0 . 1 . 2 . 3 . 4 . 5 . 6 . 7 . 8 . 9 .

2) CUSTOMER DISPLAY

Display device : LED

Number of line : 1 line

Number of positions : 7 positions

Color of display : Yellow / Green

Style : Pop up type

Character form : 7 segment + Dp

Character size : 14.2mm (H) x 7.9mm (W)

Layout:

3 . 4 . 5 . 6 . 7 . 8 . 9 .

Operator display **Customer display (Pop-up type)**

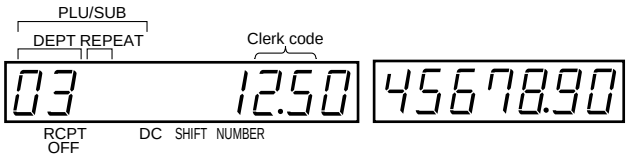

Amount: Appears in the far-right eight (max.) positions. When the amount is negative, the minus symbol "-" appears before the amount.

Number of repeats for repetitive registrations:

The number of repeats is displayed, starting at "2" and incremental with each repeat. When you have registered ten times, the display will show "0." (2 → 3 .... 9 → 0 → 1 → 2 ...)

Receipt function status:

The indicator "_" appears in the RCPT OFF position when the receipt function is in the OFF status.

Time: Appears in the second to sixth positions (using 24-hour format) in the OP X/Z, REG or MGR mode. In the REG or MGR mode, press the [#/TM/ST] key to display the time.

■ Machine state symbols

P: Appears during programming.

E: Appears when an error is detected.

o: Appears when the subtotal is displayed or when the amount tendered is smaller than the sales amount.

c: Appears when the [EX] key is pressed to calculate a subtotal in foreign currency.

F: Appears when a transaction is finalized by pressing the [TL/NS], [CH1], [CH2], [CR1] or [CR2] key.

C: Appears when the change due amount is displayed.

E-E: Appears in the far-left three positions at the timing of key entry when the electronic journal (EJ) memory is full. (Depending on programming.)

L: Appears when the voltage of the installed batteries is under the required level. You must replace with new ones within two days.

L: Appears when the batteries are not installed, or the installed batteries are dead. You must replace with new ones immediately.

•: May appear right below the eighth and ninth places at the timing of finalization of a transaction when the electronic journal (EJ) memory is nearly full.
Also appears right below the tenth place when power save mode is effective.

E-EU: Appears when programmed date (and time) for EURO modification operation is come.

H: Appears when the print roller arm is not locked.

PPPPPPPPPP :Appears when the paper is not set or out.

Segment

	Display position	Description
Amount	1-8	
Minus sign	2-10	-: Floating
Error	8-10	Exx:xx = error code
PGM Mode	10	P
CASH, CHECK, CHARGE	10	F: Light up when a registration is finalized by depressing CASH, CHECK, CHARGE key
SUB TOTAL/ short tender	10	o
Change	10	C: Light up whenever the change due amount appears in the display.
Currency Conversion	10	c: Light up whenever the foreign amount appears in the display.
Department	9-10	No zero-suppressed
PLU	7-10	No zero-suppressed
Repeat	8	Endless count, starting from 2.
Receipt OFF	9	_
DC		_: Double size character entry status
SHIFT		_: Shift character entry status
NUMBER		_: Number character entry status
Clerk No.	2, 3	-xx-: clerk number
EJ FULL	8-10	E-E: Light up when EJ memory is FULL at the timing of key entry (by PGM selection).
Low Battery	10	L:
No Battery	10	ₗ:

Decimal Point

	Display position	Description
Decimal point	7-1	
TAB	4-1	
EJ near full	8, 9	(by PGM selection)

6. PRINTER

1) Printer

- Part number : M-T53II
- NO. of station : 1 (Receipt or journal)
- Validation : No.
- Printing system : Line thermal
- No. of dot : 288 dots
- Dot pitch : Horizontal 0.167mm
  Vertical 0.174mm
- Font : 10 dots (W) × 24 dots (H)
- Printing capacity : max. 24 characters/Line
- Character size : 1.67mm (W) × 4.17mm (H) at 10 × 24 dots
- Print pitch : Column distance 2.0mm
  Row distance 5.21mm
- Print speed : Approximate 60mm/s (Approximate 12 l/s)
- Paper feed speed : Approximate 60mm/s (Approximate 12 l/s)

  (Manual feed) : Approximate 60mm/s (Approximate 12 l/s)
- Reliability : Mechanism LIFE 6 million lines used to high-quality thermal paper
- Paper end sensor : Set up
- Cutter : No
- Near end sensor : No

2) Paper

- Paper rolldimension: 57.5 ± 0.5mm in width
  Max. 80mm in diameter
- Paper quality: High-quality thermal paper
  paper thickness: 0.06 to 0.08mm

3) Logo stamp

- No

4) Printing area

Number of thermal head heater elements 288 dots

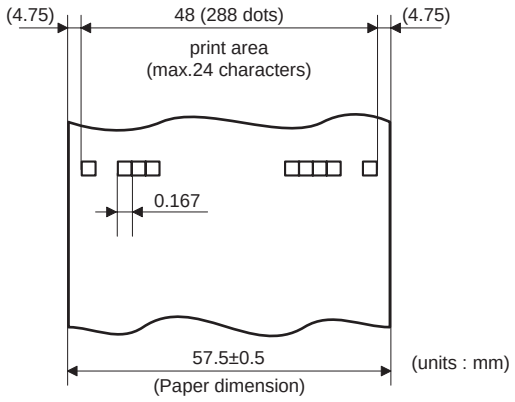

7. DRAWER

[OUTLINE]

- Standard equipment: Yes (1)
- Max. number of additional drawers: 0
- The drawer consists of:

  1) Drawer box (outer case) and drawer

  2) Money case

  3) Lock (attached to the drawer)

[SPECIFICATION]

1) DRAWER BOX AND DRAWER

Model name of the drawer box	SJ-420
Size	355 (W) x 424 (D) x 125 (H) mm
Material	Metal
Bell	–
Release lever	Standard equipment: situated at the bottom
Drawer open sensor	Yes

2) MONEY CASE

Separation from the drawer	Allowed
Separation of the bill compartments from the coin compartments	Allowed
Bill separator	–
Number of compartments	5B/8C

Layout:

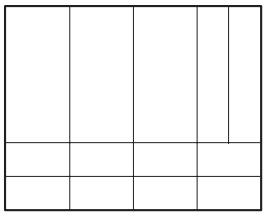

5B/8C

3) LOCK (LOCK KEY : LKGIM7331BHZZ)

- Location of the lock: Front
- Method of locking and unlocking:

  To lock, insert the drawer lock key into the lock and turn it 90 degrees counter clockwise.
  To unlock, insert the drawer lock key and turn it 90 degrees clockwise.

- Key No: SK1-1

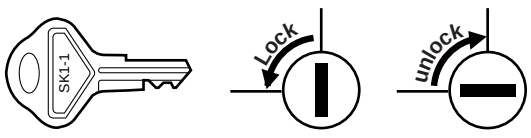

8. BATTERY

1) MEMORY BACK UP BATTERY

For memory back up, the dry battery AA (3 pieces) are needed.

1. Memory holding time:

   Approx. 1 year after New dry batteries are installed.

2. Battery exchange method:

   When the low battery symbol “L” lights up, replace the batteries (3 AA) by the following method;

   1) Power on the ECR.

   2) Mode switch turn to “REG” mode.

   3) Remove the OLD dry batteries (3 pieces).

   4) Insert the NEW dry batteries (3 pieces).

   5) Confirm the low battery symbol “L” is off.

2) LOW BATTERY

Low battery indication will appear on the left side of display when the battery voltage is low.

CASE 1: When any numeric entry & any item entry is not done or just after finalization.

The machine can indicate the low battery condition. (Always)

CASE 2: When numeric entry or item entry is done.

Battery condition will not appear.
Exceptionally, when the power is restored after a power failure, the low battery condition will appear on the display only when the battery is low.
And the indicator will disappear after any key entry.

[Display sample]

“ 0.00” : Battery is OK.
“L 0.00” : Low battery (You have to change the batteries.)
“L 0.00” : No battery (You have to change the batteries immediately.)

After finalization

“F 12.34” : Battery is OK.
“L 12.34” : Low battery. (“L” indicate instead of “F”.)
“L 12.34” : No battery. (“L” indicate instead of “F”.)

Note: “NO BATTERY”: When the “NO BATTERY” is display, the master reset is executed at the timing of “POWER ON” after the “POWER OFF”.

CHAPTER 2. OPTIONS

1. OPTIONS (No)

2. SERVICE OPTIONS (No)

3. SUPPLIES

NO	NAME	PARTS CODE	PRICE RANK	DESCRIPTION
1	Roll paper	TPAPR2377RC05	AY	5roll/pack

4. SPECIAL SERVICE TOOLS

NO	NAME	PARTS CODE	PRICE RANK	DESCRIPTION
1	RS-232 Loop-back connector	UKŌG−6705RCZZ	BU	
2	POS tools3 (IPL Software)	Software	–	

CHAPTER 3. MASTER RESET AND PROGRAM RESET

1. MASTER RESETTING

Master resetting clears the entire memory and resumes initial values.

Master resetting can be accomplished by using the following procedure:

Procedure A:
1) Plugin the AC cord to the wall outlet.
2) Set the mode switch to REG position.
3) Let the ECR be witout the memory backup battery.
4) Unplug the AC cord from the wall outlet.
5) Wait over 1 minute for discharging.
6) Plugin the AC cord to the wall outlet.

The master reset can also be accomplished in the following case.

In case power failure occurs when the machine has no battery attached to it, the master reset operation is automatically performed after the power has been restored.

(This is because if power failure occurs with no battery attached to the machine, all the memories are lost and the machine does not work properly after power recovery; this requires the master reset operation.)

2. PROGRAM RESETTING (INITIALIZATION)

This resetting resumes the initial program without clearing memory.

This resetting can be operated at below sequence in PGM mode.

Procedure:
1) Unplug the AC cord from the wall outlet.
2) Wait over 1 muinite for discharging.
3) Set the mode switch to the PGM position.
4) While holding down the FEED key, plugin the AC cord to the wall outlet.

Note: In case power failure occurs when the machine has no battery attached to it, the master reset operation is automatically performed after the power has been restored.

CHAPTER 4. HARDWARE DESCRIPTION

1. HARDWARE BLOCK DIAGRAM

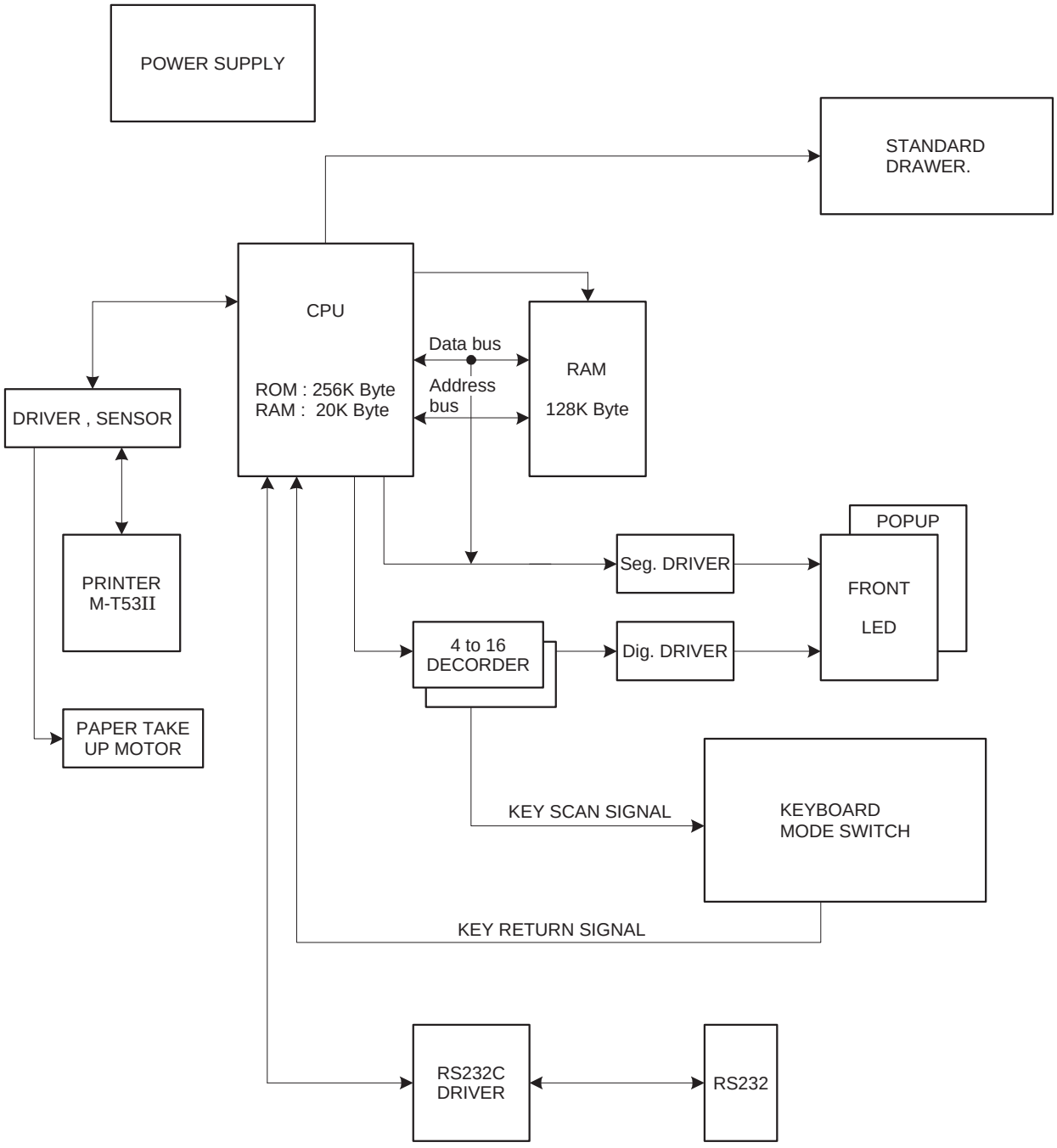

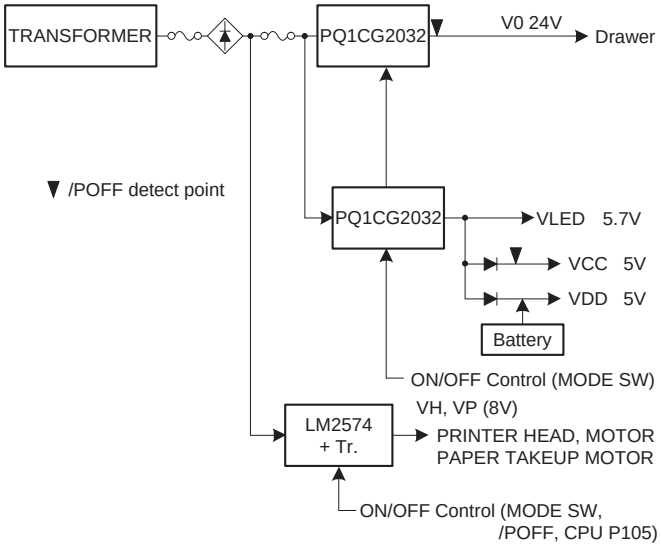

2. DESCRIPTION OF MAIN LSI'S

2-1. CPU (M30624FGAFP)

1) Pin configuration

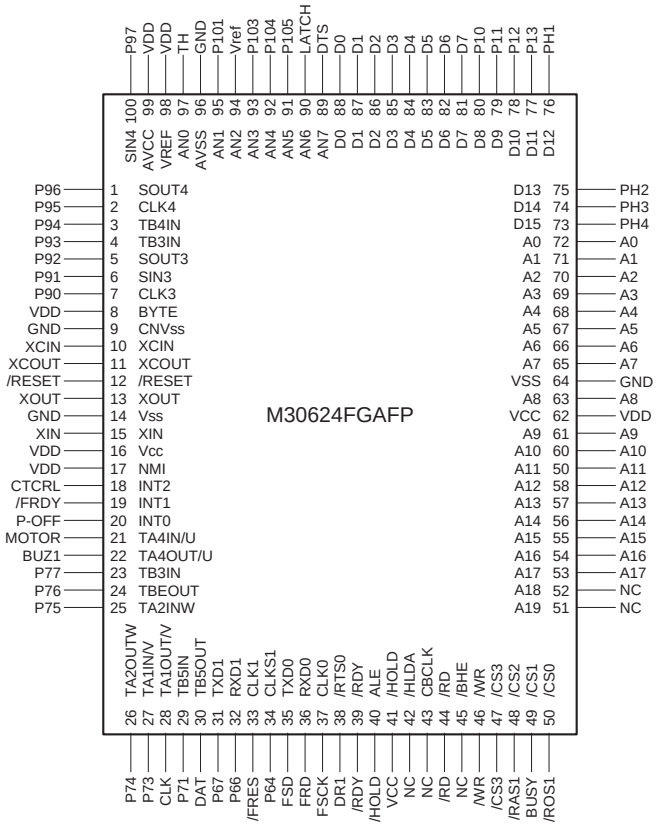

2) Pin description

Pin No.	SYMBOL	SIGNAL NAME	In/ Out	Function
1	SOUT4	P96	In	Key IN
2	CLK4	P95	In	Key IN
3	TB4IN	P94	In	Key IN
4	TB3IN	P93	In	Key IN
5	SOUT3	P92	In	Key IN
6	SIN3	P91	In	Key IN
7	CLK3	P90	In	Key IN
8	BYTE	VDD	In	VDD
9	CNVss	CNVss	In	Normal : L Booting : H
10	XCIN	XCIN	In	Calender clock :32.768KHz
11	XCOUT	XCOUT	In	Calender clock :32.768KHz
12	/RESET	/RESET	In	Reset
13	XOUT	XOUT	Out	Open
14	Vss	Vss	In	Vss
15	XIN	XIN	In	System clock
16	Vcc	VDD	In	VDD
17	NMI	P85	In	Not used
18	INT2	P84	Out	PRINTER/STB2
19	INT1	/RDY	In	NU FMC (/RDY)
20	INT0	P-OFF	In	Power off
21	TA4IN/U	MOTOR	Out	Paper take up motor drive
22	TA4OUT/U	BUZ1	Out	Buzzer drive
23	TB3IN	P77	In	RS232 :DR
24	TBEOUT	P76	In	RS232 :CS
25	TA2INW	P75	In	RS232 :CD
26	TA2OUTW	P74	Out	RS232 :ES
27	TA1IN/V	P73	Out	Drawer drive 2
28	TA1OUT/V	CLK2	Out	Printer data clock
29	TB5IN	P71	Out	NU FMC (BUSY)
30	TB5OUT	TXD2	Out	Print data
31	TXD1	P67	Out	RS232 :SD
32	RXD1	P66	In	RS232 :RD
33	CLK1	/FRES	Out	NU FMC (/FRES)
34	CTS1/RTS1	P64	Out	RS232 :RS
35	TXD0	FSD	Out	FMC :Send data
36	RXD0	FRD	In	FMC :Receive data
37	CLK0	FSCK	Out	FMC :Shift clock
38	/RTS0	DR1	Out	Drawer drive 1
39	CLKOUT	/RDY	In	/RDY (CGROM)
40	ALE	NC	Out	NOT USE
41	/HOLD	/HOLD	In	/BOOT MODE
42	/HLDA	NC	Out	NOT USE
43	CBCLK	BCLK	Out	BCLK
44	/RD	/RD	Out	Read
45	/BHE	NC	Out	NOT USE
46	/WR	/WR	Out	Write
47	/CS3	CS3	Out	Display segment latch
48	/CS2	/CS2	Out	Chip select :for RAM
49	/CS1	/CS1	Out	EPM Control
50	/CS0	/CS0	Out	Chip select :for ROM
51	A19	A19	Out	Address bus :19
52	A18	A18	Out	Address bus :18

Pin No.	SYMBOL	SIGNAL NAME	In/ Out	Function
53	A17	A17	Out	Address bus :17
54	A16	A16	Out	Address bus :16
55	A15	A15	Out	Address bus :15
56	A14	A14	Out	Address bus :14
57	A13	A13	Out	Address bus :13
58	A12	A12	Out	Address bus :12
59	A11	A11	Out	Address bus :11
60	A10	A10	Out	Address bus :10
61	A9	A9	Out	Address bus :9
62	VCC	VDD	In	VDD
63	A8	A8	Out	Address bus :8
64	VSS	VSS	In	VSS
65	A7	A7	Out	Address bus :7
66	A6	A6	Out	Address bus :6
67	A5	A5	Out	Address bus :5
68	A4	A4	Out	Address bus :4
69	A3	A3	Out	Address bus :3
70	A2	A2	Out	Address bus :2
71	A1	A1	Out	Address bus :1
72	A0	A0	Out	Address bus :0
73	P17	ENA2	Out	Paper feed motor :ENA2
74	P16	ENA1	Out	Paper feed motor :ENA1
75	P15	IN2	Out	Paper feed motor :IN2
76	P14	IN1	Out	Paper feed motor :IN1
77	P13	P13	Out	Key/Display
78	P12	P12	Out	Key/Display
79	P11	P11	Out	Key/Display
80	P10	P10	Out	Key/Display
81	D7	D7	InOut	Data bus :7
82	D6	D6	InOut	Data bus :6
83	D5	D5	InOut	Data bus :5
84	D4	D4	InOut	Data bus :4
85	D3	D3	InOut	Data bus :3
86	D2	D2	InOut	Data bus :2
87	D1	D1	InOut	Data bus :1
88	D0	D0	InOut	Data bus :0
89	AN7	STB1	Out	Printer head strobe
90	AN6	LATCH	Out	Printer data latch
91	AN5	P105	Out	Printer head voltage ON
92	AN4	P104	Out	CG ROM Bank
93	AN3	P103	In	VBAT
94	AN2	Vref	In	NU Vret
95	AN1	P101	In	Printer head voltage check
96	AVSS	VSS	In	VSS
97	AN0	TH	In	Print head temperature check
98	VREF	VDD	In	VDD
99	AVCC	VDD	In	VDD
100	SIN4	P97	In	Key IN

3. CLOCK GENERATOR

1) CPU

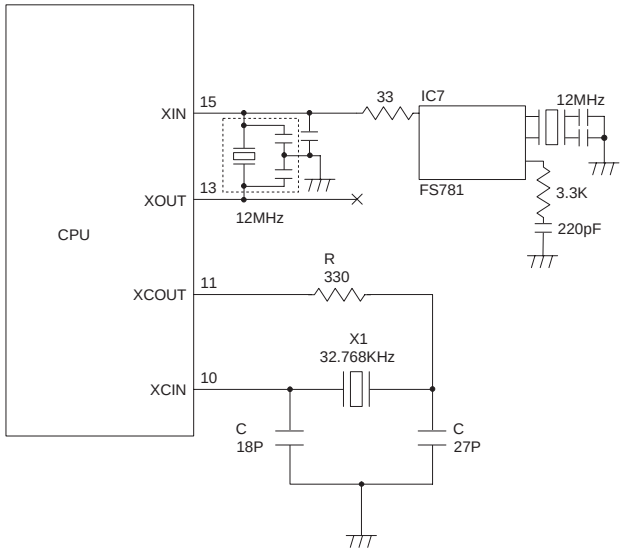

Two oscillators are connected to the CPU.
The basic clock X2 is supplied from a 12MHz oscillator.
If the CPU was not operating properly, the signal does not appear on this line in most cases.
The sub-clock X1 generates 32.768KHz which is primarily used to update the internal RTC (real time clock).
During the standby mode, it keeps oscillating to update the clock and monitoring the power recovery.

4. RESET CIRCUIT

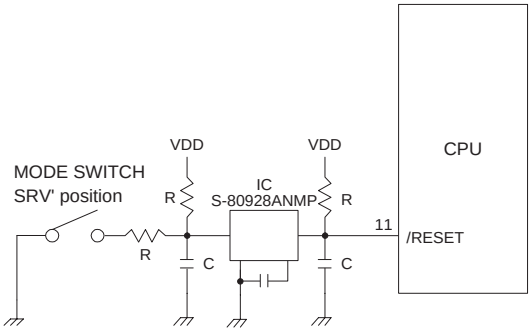

(1) When the mode switch is placed in the “SRV” position, the reset signal is sent to the CPU to reset the hardware.

(2) When VDD ≦ 2.8V, a reset signal is outputted from the reset IC. (S-80928ANMP)

5. P-OFF CIRCUIT

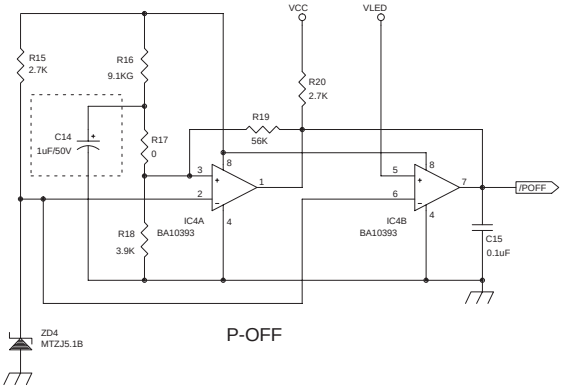

The P-OFF signal detects two signals by two comparators and sent to the CPU.

V0 (24V) signal: If the power voltage V0 (24V) falls bellow the specified level, the P-OFF signal is driver to LOW by the comparator ICAA.

VLED signal: If the LED/Logic power voltage VLED falls below the specified level, the P-OFF signal is driven to LOW by the comparator IC4B.

6. MEMORY CIRCUIT

1) Address map

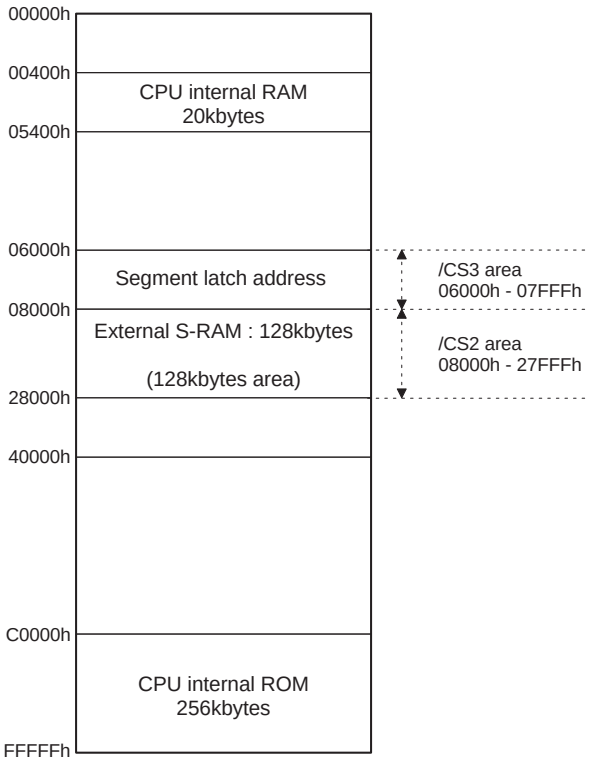

2) RAM control

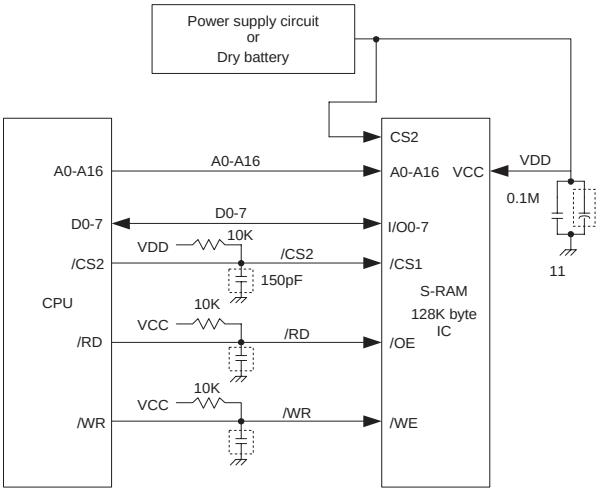

7. PRINTER CONTROL CIRCUIT

1) Paper feed motor circuit

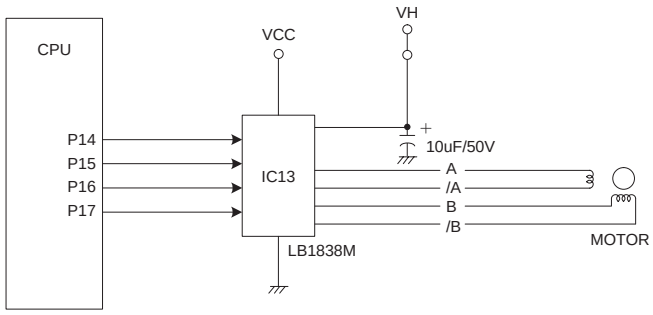

Stepping motor control

The 2-phase, bi-polar stepping motor is driven at a constant voltage by LB1838M (made by SANYO).

1 step: 0.087mm

1 dot: 2 steps

CPU port

No.	CPU port	Signal used
76	P14	IN1
75	P15	IN2
74	P16	ENA1
73	P17	ENA2

Drive step

	Driver IC input (CPU output)				Motor drive signal			
STEP	IN1	IN2	ENA1	ENA2	A (OUT1)	B (OUT3)	/A (OUT2)	/B (OUT4)
1	L	L	H	H	H	H	L	L
2	H	L	H	H	L	H	H	L
3	H	H	H	H	L	L	H	H
4	L	H	H	H	H	L	L	H

2) Print circuit

Thermal head configuration

As shown in the equivalent circuit in the figure, thermal head consists of heating elements and head drivers which drives and controls those heating elements.

The serial print data input through the DATA IN (D1) is transferred to the shift register synchronizing with the CLOCK (CP) and stored in the latch register by the LATCH (LA) signal.

The head conduction signals (print commands 1 ~ 6) turn the gate on to conduct the heating element corresponding to the print data.

Thermal head block daigram

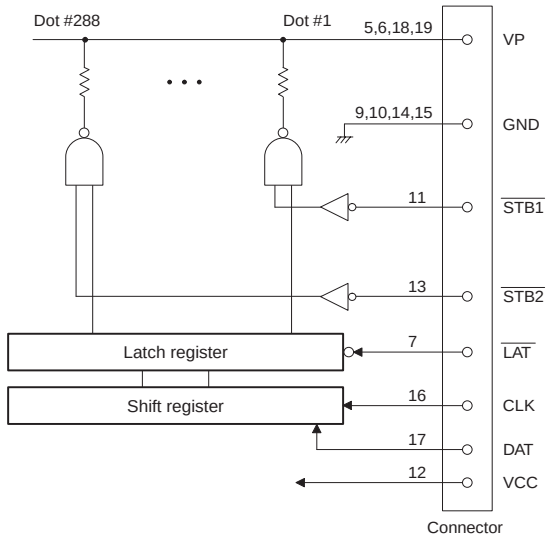

Thermal head strobe terminals

STB No.	Dot No.	Number of dots
1	1 ~ 144	144
2	145 ~ 288	144

8. PAPER TAKE UP MOTOR DRIVE CIRCUIT

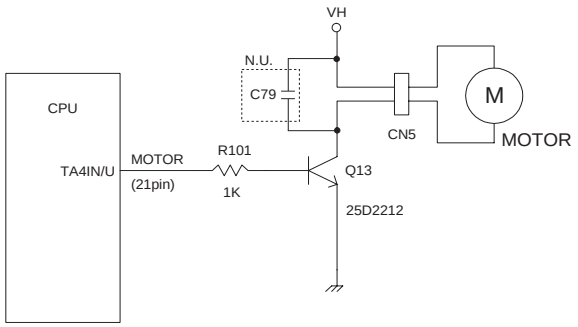

When the MOTOR signal from the CPU is HIGH, Q1 is turned on to operate the motor.

9. DRAWER DRIVE CIRCUIT

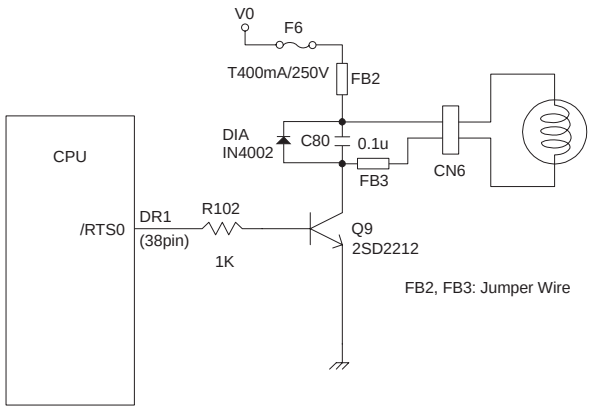

When the DR1 signal from the CPU is HIGH, Q9 is turned on to operate the solenoid.

10. BUZZER DRIVE CIRCUIT

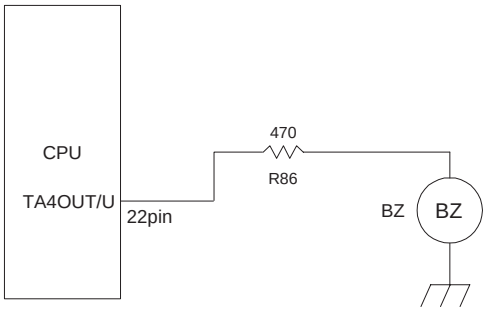

When the pulse signal (about 4KHz) is generated from the CPU, the buzzer sounds.

11. KEYBOARD CIRCUIT

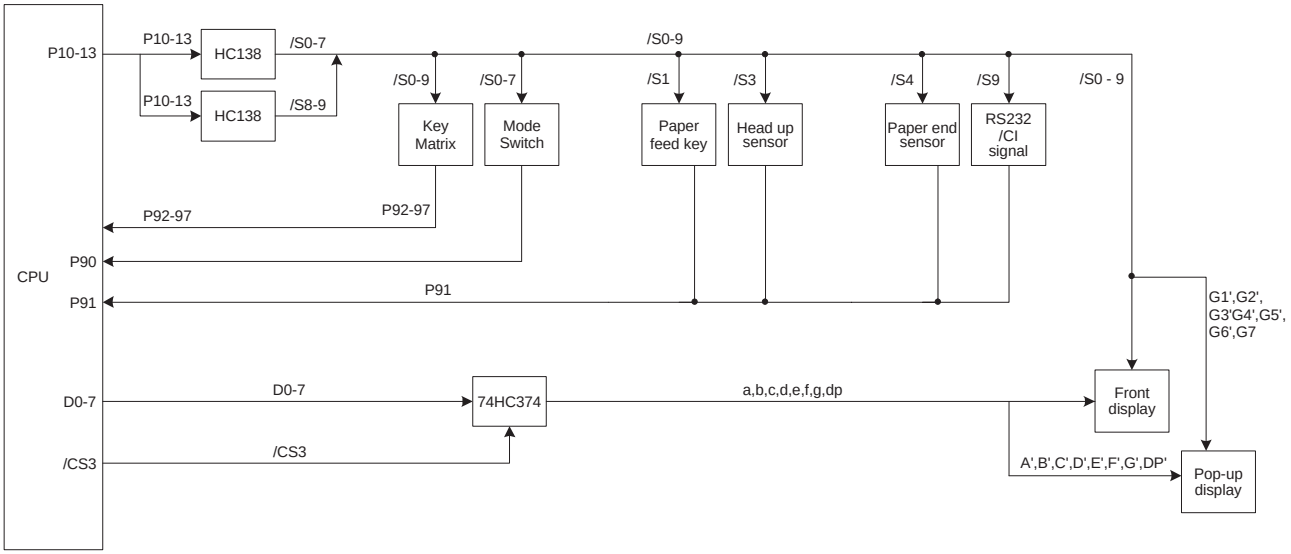

Four P10-13 signals from the CPU are converted into 16 strobe signals by two 74HC138 for use in various functions.

1) Keyboard

Scan signal: 10 /S0-9 signals

Return signal: 6 P92-97 signals

The keys are read by the key matrix following the above signals.

2) Mode switch

Scan signal: 8 /S0-7 signals

Return signal: 1 P90 signal

The positions are read by the above signals.

Scan signal	/S0	/S1	/S2	/S3	/S4	/S5	/S6	/S7
Mode switch position	(SRV)	PGM	∞	OPX/Z	REG	MGR	X1/Z1	X2/Z2

3) Paper feed key

Scan signal: 1 /S1 signal

Return signal: 1 P91 signal

The paper feed key is read by the above signals.

4) Head up sensor

Scan signal: 1 /S3 signal

Return signal: 1 P91 signal

The Head up sensor state is read by the above signals.

Head up sensor	Head up detected	Head up not detected
P91	Low	High

5) Paper end sensor

Scan signal: 1 /S4 signal

Return signal: 1 P91 signal

The paper end sensor state is read by the above signals.

Receipt near end sensor	End detected	End not detected
P91	Low	High

6) RS232/CI signal detection

Scan signal: 1 /S9 signal

Return signal: 1 P91 signal

The RS232/CI signal is detected by the above signals.

RS232 /CI signal	/CI signal detected	/CI signal not detected
P91	Low	High

7) Display

Scan signal: 10 /S0-9 signals

The above 10 scan signals are used as the following digit signals.

Digit signal:

Scan signal	/S0	/S1	/S2	/S3	/S4	/S5	/S6	/S7	/S8	/S9
Digit signal: Front	G1'	G2'	G3'	G4'	G5'	G6'	G7'	G8'	G9'	G10'
Digit signal: Pop-up	G1'	G2'	G3'	G4'	G5'	G6'	G7'			

Segment signal : Segment signals: a, b, c, d, e, f, g, and DP are output by the IC:74HC374, using the data bus signal:D0-7 from the CPU as an input signal and the chip select signal:/CS3 as a latch signal.

12. RS232 CIRCUIT

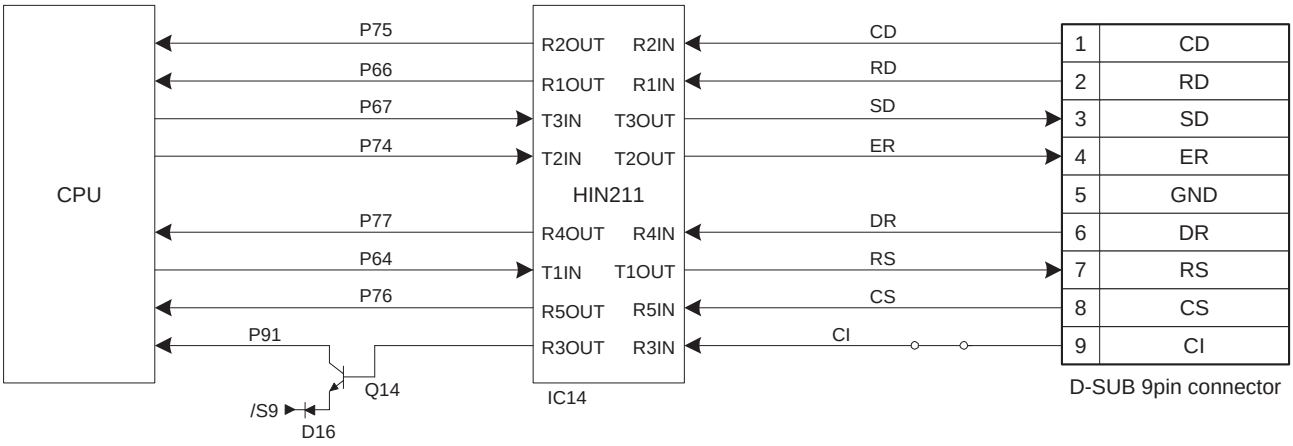

The signals from the CPU are converted by the HIN211 into the RS232 level to input and output them.

CHAPTER 5. TEST FUNCTION

1. TEST ITEMS

The test items are as follows:

NO.	Code	Description
1	100	Display buzzer test
2	101	Key code
3	102	Printer test
4	104	Keyboard test
5	105	mode switch test
6	106	Printer sensor test
7	107	Clock display test
8	110	Drawer 1 open & sensor test
9	120	External RAM test
10	121	CPU internal RAM test
11	140	CPU internal ROM test
12	160	AD conversion port test
13	500	RS232C test
14	550	Sleep mode test

2. DESCRIPTION OF EACH DIAGNOSTIC PROGRAM

1) DISPLAY BUZZER TEST

① Key operation

100 ⟶ RCPT/PO

② Test procedure

Display at operator side 1.2.3.4.5.6.7.8.9.0.
Display at front side 4.5.6.7.8.9.0.

The decimal point will shift in steps of 1 digit from the lower digit to the upper (every 200 m sec).

After that, all segments turn on (about 1 sec)

Display at operator side 8.8.8.8.8.8.8.8.8.8.
Display at front side 8.8.8.8.8.8.8.

This mode is repeated.
At the same time, the buzzer sounds continuously.

③ Check that:

A) Each position is correctly displayed.

B) The brightness of each number is uniform.

C) The buzzer sound is normal.

④ End of testing

You can exit the test mode by pressing any key. The following is printed.

1 0 0

2) KEY CODE

① Key operation

101 ⟶ RCPT/PO

② Test procedure

Display ◯ ◯ ◯
KEY CODE

③ Check that:

KEY code: Every time a key is pressed, the code of that key is displayed as a decimal number.

When a key is pressed twice or pressed in an incorrect manner, --- will be displayed.

④ End of testing

You can exit the test mode by turning the mode switch to a position other than the SRV mode. The printer prints as follows:

1 0 1

3) PRINTER TEST

① Key operation

102 ⟶ RCPT/PO

② Test procedure

Display 1 2 3 4 5 6 7 8 9 0

```
ZZZZZZ  ----------ZZZZZ
ZZZZZZ  ----------ZZZZZ
ZZZZZZ  ----------ZZZZZ
```

3 lines of 24 Z's are printed.

③ Check that:

The print is free from contamination, blur, and uneven density.

④ End of testing

The test will end automatically.

4) KEYBOARD TEST

① Key operation

104 ⟶ RCPT/PO

② Test procedure

The keyboard is checked using the sumcheck data of the key code.

Display 1 0 4 ◯ ◯ ◯
KEY CODE

③ Check:

A) The content of completion print

④ End of testing

When the test ends normally 104
When an error occurs E- ~ - 104

Note: Calculation of key sumcheck data
The hard code (hexadecimal number) at the position (excluding feed key) where there is an input data contact is added.
However, the end key (CA/AT/NS) is not added.
This data to which hard codes have been added is converted into a decimal number value, which will become the sumcheck data that will be entered when the Diag is started.

5) MODE SWITCH TEST

① Key operation

105 → RCPT/PO

② Test procedure

Display 1 0 5 X

MODE: _PGM_ ∞ _ ⏻ _OP X/Z_REG_MGR_X1/Z1_X2/Z2____PGM
x : 1 2 9 3 4 5 6 7 1

The above x must be read in the correct order. (If the contact is open, 9 will be displayed.)

③ Check:

The display during testing and the content of the completion print.

④ End of testing

When the test ends normally: 105
When an error occurs: E- ~ - 105

6) PRINTER SENSOR TEST

① Key operation

106 → RCPT/PO

② Test procedure

Check the status of paper end sensor and head up sensor.

7-segment display: 1 0 6 X Y

③ Check the following:

X:1 - Paper present Y:1 - Head DOWN
O - Out of paper O - Head UP

④ End of testing

You can exit the test mode by pressing any key and the printer prints the following:

1 0 6

7) CLOCK TEST

① Key operation

107 → RCPT/PO

② Test procedure

Displayed digit: 8 7 6 5 4 3 2 1

7-segment display: ∗ ∗ − ∗ ∗ ∗ ∗

hour min sec

Blinks at an interval of 0.5 sec.

③ Check that:

"-" blinks and the clock counts up.

④ End of testing

When any key is pressed, the date and time are printed and the test mode will terminated.

Display 1 0 6 XXXXXX - XXXXXX

year month day hour min sec

8) DRAWER 1 OPEN AND SENSOR TEST

① Key operation

110 → RCPT/PO

② Test procedure

Display 1 1 0 X

X: O = DRAWER OPEN
C = DRAWER CLOSED

③ Check that:

A) The drawer opens normally.

B) The sensor correctly indicates the status of the drawer 1.

∗On the XE-A202, "C" (CLOSED) is always displayed.

④ End of testing

You can exit the test mode by pressing any key. The printer prints the following.

1 1 0

9) EXTERNAL RAM TEST

① Key operation

120 → RCPT/PO

② Test procedure

The standard 128 Kbyte RAM is checked.
The contents of the memory are lost after this test.
RAM(08000H ~ 27FFFH area) is tested in the following procedure:

a) Data in the test area is stored.

b) Write "00H"

c) Read and compare "00H" and then write"55H"

d) Read and compare "55H" and then write"AAH"

e) Read and compare "AAH"

f) Restore stored data.

If an error occurs at a step, the error is printed.
If an error does not occur, the following addresses are checked.

Addresses to be checked:
10000H , 10001H , 10002H , 10004H , 10008H
10010H , 10020H , 10040H , 10080H ,
10100H , 10200H , 10400H , 10800H ,
11000H , 12000H , 14000H , 18000H ,
20000H

Display 1 2 0

③ Check:

A) The completion print.

④ End of testing

The program ends after printing.

When the test ends normally. 120
When the test ends abnormally. Ex- ~ - 120
*****
x = 1: Data error
x = 2: Address error

When an error occurs, the printer outputs the error message and then the address where the error has occurred in the area ****.

10) CPU internal RAM test

① Key operation

121 ⟶ RCPT/PO

② Test procedure

The test program checks internal RAM of the CPU.
The contents of the memory are lost after this test.
RAM (00400H - 053FFH area) is tested in the following procedure.

a) Data in the test area is stored.
b) Write “00H”
c) Read and compare “00H” and then write “55H”
d) Read and compare “55H” and then read “AAH”
e) Read and compare “AAH”
f) Stored data is restored.

If an error occurs at a step, the error is printed.
If an error does not occur, the following addresses are checked.
Addresses to be checked:

01000H , 01001H , 01002H , 01004H , 01008H
01010H , 01020H , 01040H , 01080H ,
01100H , 01200H , 01400H , 01800H ,
02000H , 04000H

Display 1 2 1

③ Check:

The completion print.

④ End of testing.

The test program ends after printing.

When the test ends normally. 121
When the test ends abnormally. Ex- ~ - 121
*****
x = 1: Data error
x = 2: Address error

If an error occurs, the printer outputs the error message and then the address where the error has occurred in the area ****.

11) CPU internal ROM test

① Key operation

140 ⟶ RCPT/PO

② Test procedure

The test program checks that the checksum of the CPU internal flash ROM (C0000H - FFFFFH) is correct.
The lower two digits of the checksum should be 10H.(pending)

Display 1 4 0

③ Check:

The completion print.

④ End of testing

The test will automatically be terminated and the printer prints as follows:

When the test ends normally. 140
ROM ******** (CPU CODE)
******** (Version)
When the test ends abnormally. E- ~ - 140
ROM ******** (CPU CODE)
******** (Version)

12) AD conversion port

① Key operation

160 ⟶ RCPT/PO

② Test procedure

The test program displays the voltage of each AD port.

1. Head temperature 1 6 0 1 XXX
2. Head voltage 1 6 0 2 XXX
3. Battery voltage 1 6 0 3 XXXX

③ End of testing

You can exit the test mode by pressing any key.
The printer prints the follwing.

1 6 0

13) RS232C test

Install the RS232C loopback connector. (UKOG-6705RCZZ)

① Key operation

500 ⟶ RCPT/PO

② Test procedure

Control signal check

OUT PUT		IN PUT			
/ER	/RS	/DR	/CI	/CD	/CS
OFF	OFF	OFF	OFF	OFF	OFF
OFF	ON	OFF	OFF	ON	ON
ON	OFF	ON	ON	OFF	OFF
ON	ON	ON	ON	ON	ON

Data communication check

A loopback test of 256-byte data between SD-RD is performed.
DATA: $00 - $FF BAUD RATE: 9600 BPS

7-segment display: 5 0 0

③ Check:

The completion print.

④ End of testing

Completion print RS TEST OK
Error print RS TEST **NG**ERxx

xx	Contents of the error	
01	ER DR error	
02	ER CI error	
03	RS CD error	
04	RS CS error	
05	SD RD error	DATA data
06	SD RD error	DATA error/framing error

14) Sleep mode test

① Key operation

550 ⟶ RCPT/PO

② Test procedure

The test program checks the system in SLEEP MODE (The display goes off and the Decimal point comes on) and then waits for any status change (KEY input or RS PORT change).

③ Check that:

A) The display goes off (excluding Decimal point)

B) The system turns active when any key is pressed.

④ End of testing

The test program will automatically be terminated and the printer prints the following.

5 5 0

CHAPTER 6. IPL (INITIAL PROGRAM LOADING) FUNCTION

The application program of the XE-A202 is written into the Flash ROM in the CPU.

Since the CPU supplied as a service part does not include the application program in it, the application program must be written when the CPU is replaced with a new one.

To write the application program into the Flash ROM, connect the PC and the XE-A202 with an RS-232C cable, and execute the PC software.

∗Use a D-Sub 9pin cross cable employed in conventional communication between ECR-ECR (See APPENDIX: RS232C CABLE).

[Related parts/Tool]

PARTS NAME	PARTS CODE	LOCATION No.
CPU (without application program)	VHi30624FGA−1	IC5
PosUtilityTool3	Software	

[IPL PROCEDURE]

1) Connect the XE-A202 and PC with an RS-232C cable.

<XE-A202 side>

2) Turn off the AC Power. (& remove batteries.)

3) Open the cabinet.

4) Change the IPL JUMPER PIN (SP1) to the rear side.

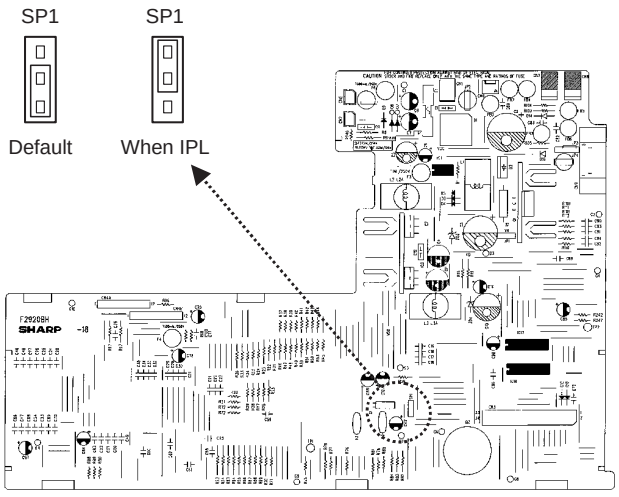

<Main PWB>

5) Close the cabinet.

6) Turn on the AC Power.
(At this time, ECR looks like inactive, but ECR waits the ROM data from PC.)

<IPL software on PC>

7) Copy the following files in "PosUtilityTool3" into the hard disk of PC.

Postool3.exe

A202v.ROM

8) Boot "Postool3.exe."

9) Push [Add Files] in the screen.

10) Select the ROM DATA file. (File name: A202V.ROM)

11) By pushing [Send] in the screen, the ROM data is sent from PC to ECR.
The address counter is shown on PC and counts up.

12) After about 3-minuites, the message "Complete" is shown on PC.

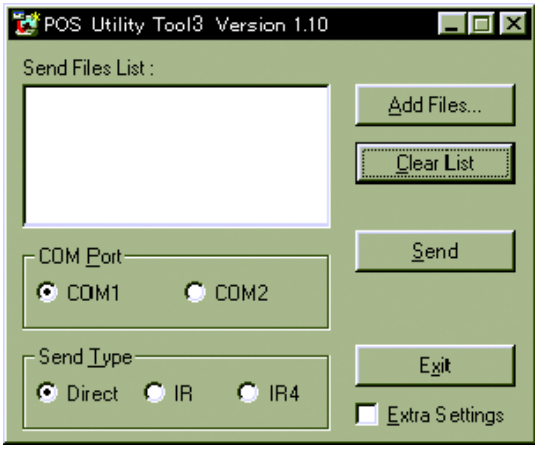

<After booting>

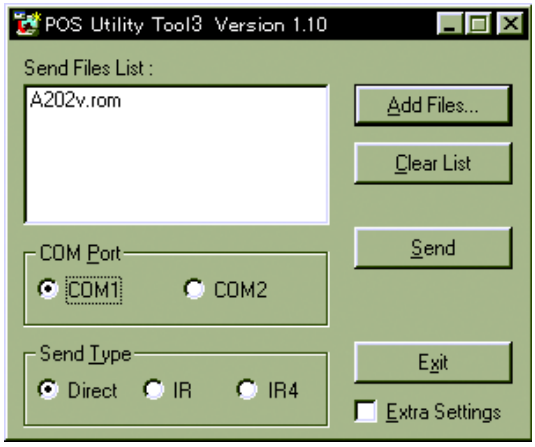

<After pushing "Add Files">

∗1 COM Port is selectable between COM1 and 2.

∗2 For "Send Type", select "Direct".

∗3 Do not select "Extra Setting".

<XE-A202 side>

12) Turn on the AC Power.

13) Open the cabinet.

14) Change the Jumper PIN (SP1) to the front side. (default position)

15) Close the cabinet.

16) Turn on the AC Power.

Master Reset will be performed. If not, power off the XE-A202, wait 1miniute and turn on the power again.

APPENDIX: RS232C CABLE

The RS-232C cable has the following internal connections:

(Equivalent to a cross cable used in the conventional connection of ECR-ECR)

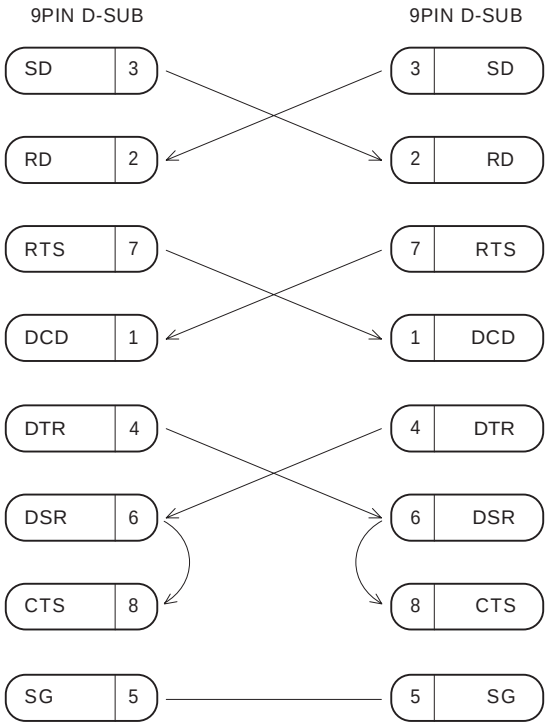

SD : TRANSMITTED DATA
RD : RECEIVED DATA
DTR : DATA TERMINAL READY
DSR : DATA SET READY
RTS : REQUEST TO SEND
DCD : DATA CARRIER DETECTOR
CTS : CLEAR TO SEND

CHAPTER 7. CAUTION TO BE USED WHEN CONNECTING THE RS-232 CABLE

When connecting the RS-232 cable to the XE-A212, be sure to observe the following condiiton:

Secure the attached core (RCORF6699BHZZ) to the RS-232 cable in the area within 20mm from the connector.
[This is a necessary procedure to support the EMI (Electronics Magnetic Interface).]

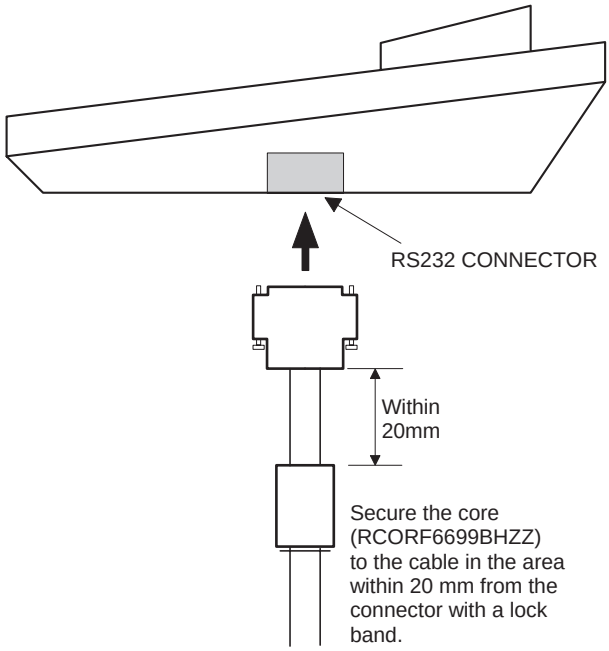

CHAPTER 8. CIRCUIT DIAGRAM AND PWB LAYOUT

1/4

1. MAIN PWB CIRCUIT

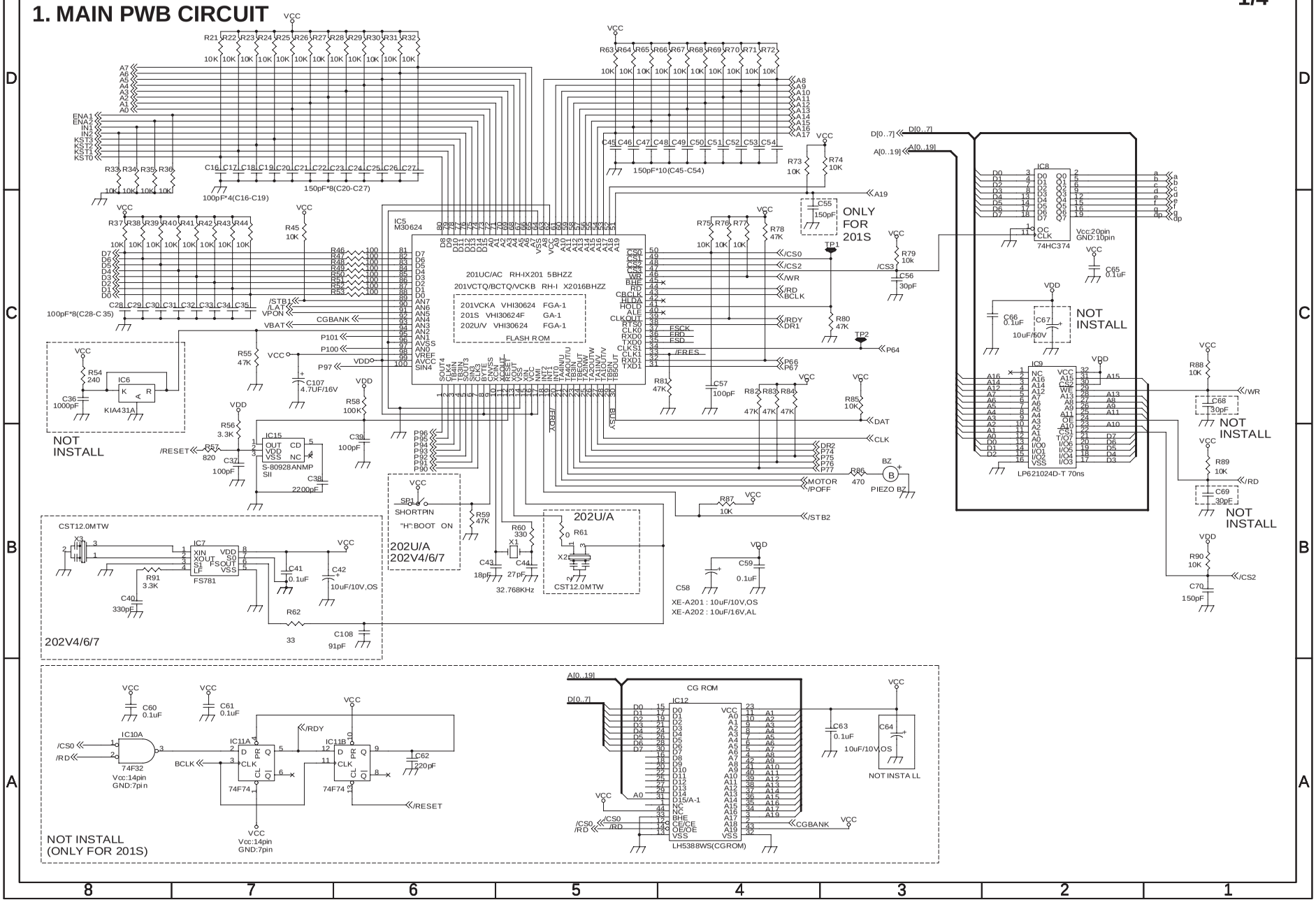

2/4

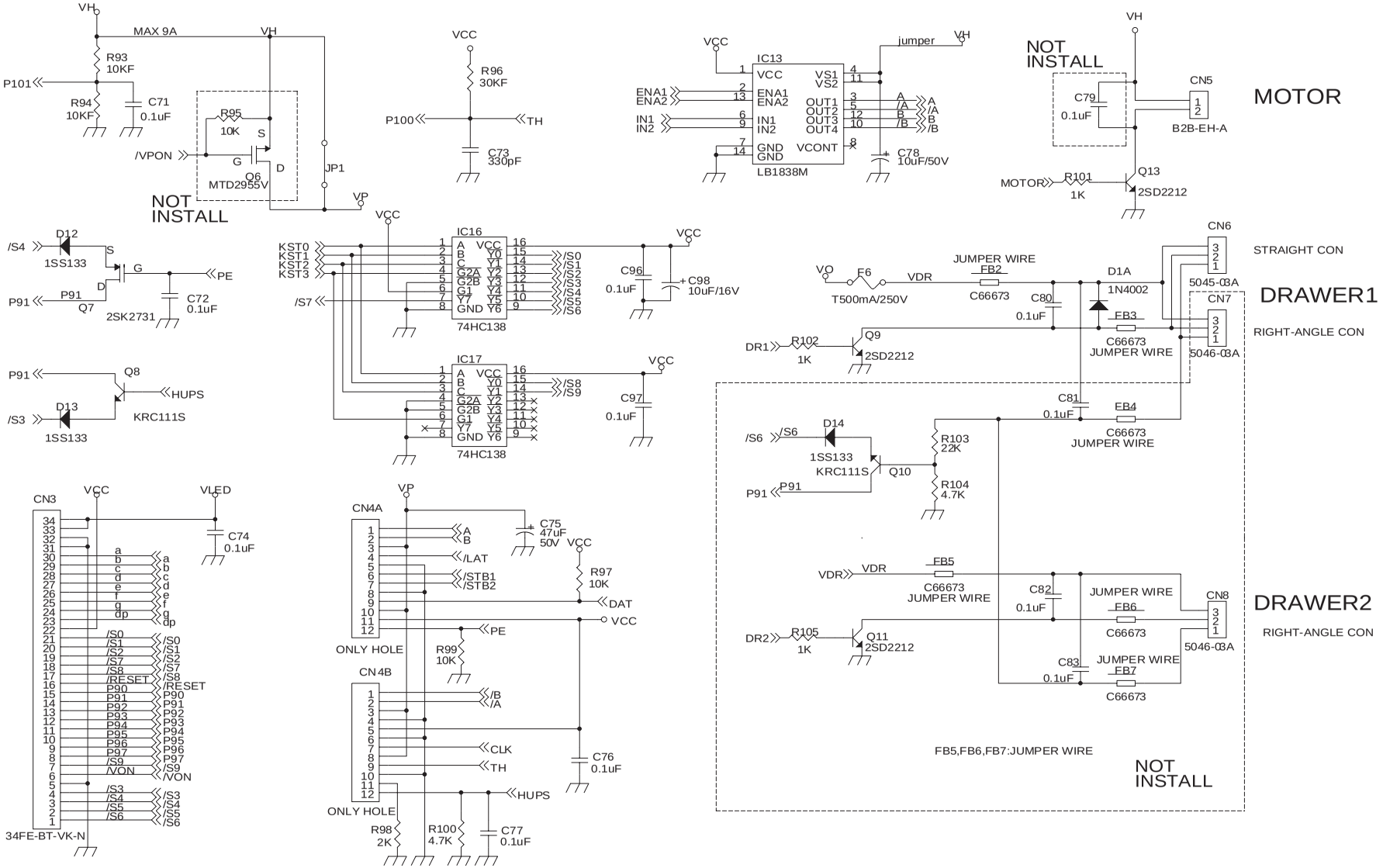
VH
MAX 9A
R93 10KF
P101
R94 10KF
C71 0.1uF
R95 10K
/VPON
Q6 MTD2955V
JP1
VP
NOT INSTALL
VCC
R96 30KF
P100
TH
C73 330pF
IC13
LB1838M
jumper
ENA1
ENA2
IN1
IN2
VCONT
C78 10uF/50V
NOT INSTALL
CN5
C79 0.1uF
B2B-EH-A
MOTOR
R101 1K
Q13 2SD2212
D12 1SS133
/S4
P91
Q7 2SK2731
C72 0.1uF
PE
IC16
74HC138
KST0
KST1
KST2
KST3
/S7
C96 0.1uF
C98 10uF/16V
IC17
74HC138
C97 0.1uF
Q8 KRC111S
D13 1SS133
/S3
HUPS
CN6
STRAIGHT CON
5045-03A
DRAWER1
CN7
RIGHT-ANGLE CON
5046-03A
VO
F6 T500mA/250V
VDR
JUMPER WIRE
FB2
C66673
C80 0.1uF
D1A 1N4002
FB3
C66673 JUMPER WIRE
DR1
R102 1K
Q9 2SD2212
C81 0.1uF
FB4
C66673 JUMPER WIRE
/S6
D14 1SS133
KRC111S
Q10
R103 22K
R104 4.7K
P91
VDR
FB5
C66673 JUMPER WIRE
C82 0.1uF
JUMPER WIRE
FB6
C66673
CN8
DRAWER2
RIGHT-ANGLE CON
5046-03A
DR2
R105 1K
Q11 2SD2212
C83 0.1uF
JUMPER WIRE
FB7
C66673
FB5,FB6,FB7:JUMPER WIRE
NOT INSTALL
CN3
VLED
C74 0.1uF
34FE-BT-VK-N
CN4A
C75 47uF 50V
R97 10K
DAT
ONLY HOLE
R99 10K
/LAT
/STB1
/STB2
CN4B
/B
/A
CLK
C76 0.1uF
ONLY HOLE
R98 2K
R100 4.7K
C77 0.1uF

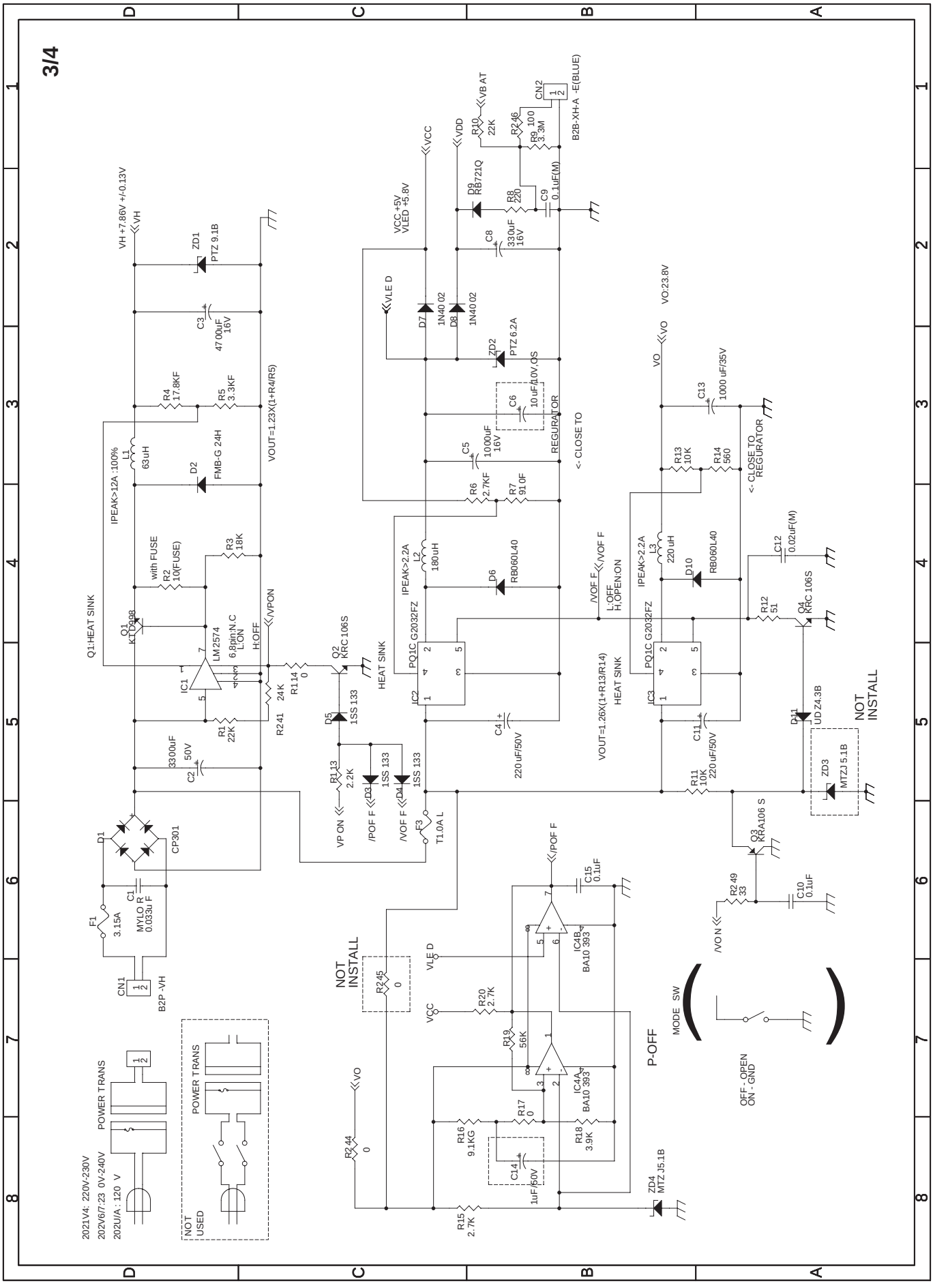
3/4
VH +7.86V +/-0.13V
VH
ZD1
PTZ 9.1B
C3
47 00uF
16V
R4
17.8KF
R5
3.3KF
VOUT=1.23X(1+R4/R5)
IPEAK>12A :100%
L1
63uH
D2
FMB-G 24H
with FUSE
R2
10(FUSE)
R3
18K
Q1:HEAT SINK
Q1
KTD998
IC1
LM2574
6.8pin:N.C
L:ON
H:OFF
/VPON
R1
22K
R114
0
Q2
KRC 106S
HEAT SINK
R241
24K
D5
1SS 133
R113
2.2K
D3
1SS 133
D4
1SS 133
F3
T1.0A L
VP ON
/POF F
/VOF F
C2
3300uF
50V
D1
CP301
F1
3.15A
C1
MYLO R
0.033u F
CN1
B2P -VH
VCC
VLE D
D7
1N40 02
D8
1N40 02
ZD2
PTZ 6.2A
C6
10 uF/10V.OS
REGURATOR
<- CLOSE TO
C5
1000uF
16V
R6
2.7KF
R7
91 0F
IPEAK>2.2A
L2
180uH
D6
RB060L40
PQ1C G2032FZ
IC2
C4
220 uF/50V
VCC+5V
VLED +5.8V
D9
RB721Q
C8
330uF
16V
R8
220
C9
0.1uF(M)
VDD
R10
22K
VB AT
R246
100
R9
3.3M
CN2
B2B-XH-A -E(BLUE)
VO
VO:23.8V
C13
1000 uF/35V
R13
10K
R14
560
<- CLOSE TO
REGURATOR
/VOF F
L:OFF
H,OPEN:ON
IPEAK>2.2A
L3
220 uH
D10
RB060L40
PQ1C G2032FZ
IC3
VOUT=1.26X(1+R13/R14)
HEAT SINK
C11
220 uF/50V
R11
10K
R12
51
Q4
KRC 106S
C12
0.02uF(M)
D11
UDZ4.3B
ZD3
MTZJ 5.1B
NOT
INSTALL
Q3
KRA106 S
R2 49
33
C10
0.1uF
/VO N
/POF F
C15
0.1uF
IC4B
BA10 393
NOT
INSTALL
R245
0
VLE D
VCC
R20
2.7K
R19
56K
IC4A
BA10 393
VO
R244
0
R16
9.1KG
R17
0
R18
3.9K
C14
1uF/50V
R15
2.7K
ZD4
MTZJ5.1B
P-OFF
MODE SW
OFF - OPEN
ON - GND
2021V4: 220V-230V
202V6/7:23 0V-240V
202U/A : 120 V
POWER TRANS
NOT
USED
POWER TRANS

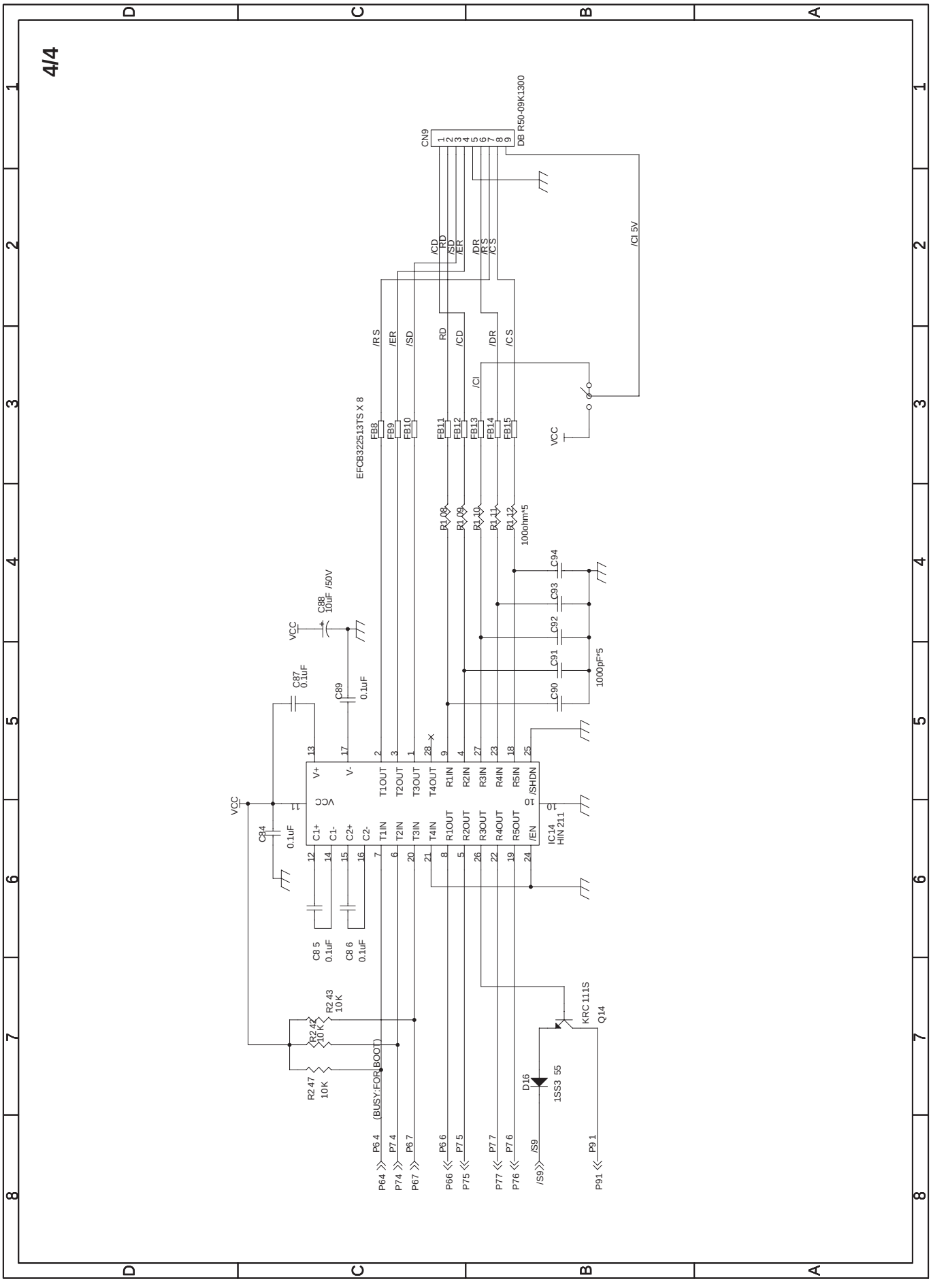
4/4
CN9
DB R50-09K1300
/CI 5V
EFCB322513TS X 8
FB8
FB9
FB10
FB11
FB12
FB13
FB14
FB15
R1 08
R1 09
R1 10
R1 11
R1 12
100ohm*5
C94
C93
C92
C91
C90
1000pF*5
C88
10uF /50V
C87
0.1uF
C89
0.1uF
C84
0.1uF
C8 5
0.1uF
C8 6
0.1uF
IC14
HIN 211
R2 43
10K
R2 42
10K
R2 47
10K
(BUSY:FOR BOOT)
KRC 111S
Q14
D16
1SS3 55
P6 4
P7 4
P6 7
P6 6
P7 5
P7 7
P7 6
/S9
P9 1
P64
P74
P67
P66
P75
P77
P76
/S9
P91

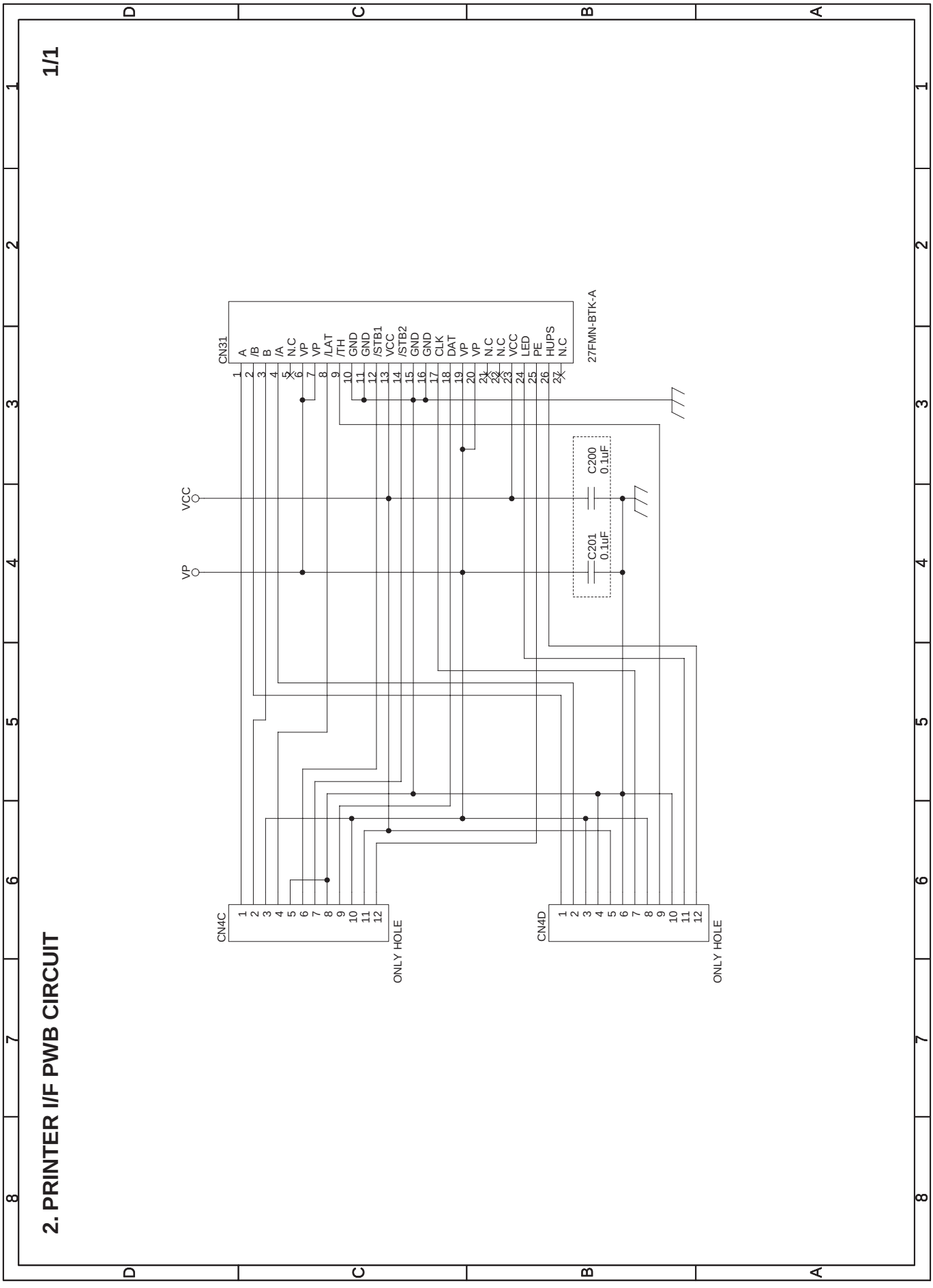
2. PRINTER I/F PWB CIRCUIT
1/1
CN31
27FMN-BTK-A
A
/B
B
/A
N.C
VP
VP
/LAT
/TH
GND
GND
/STB1
VCC
/STB2
GND
GND
CLK
DAT
VP
VP
N.C
N.C
VCC
LED
PE
HUPS
N.C
VCC
VP
C200
0.1uF
C201
0.1uF
CN4C
CN4D
ONLY HOLE
ONLY HOLE

PWB LAYOUT

1. MAIN PWB LAYOUT

A. side

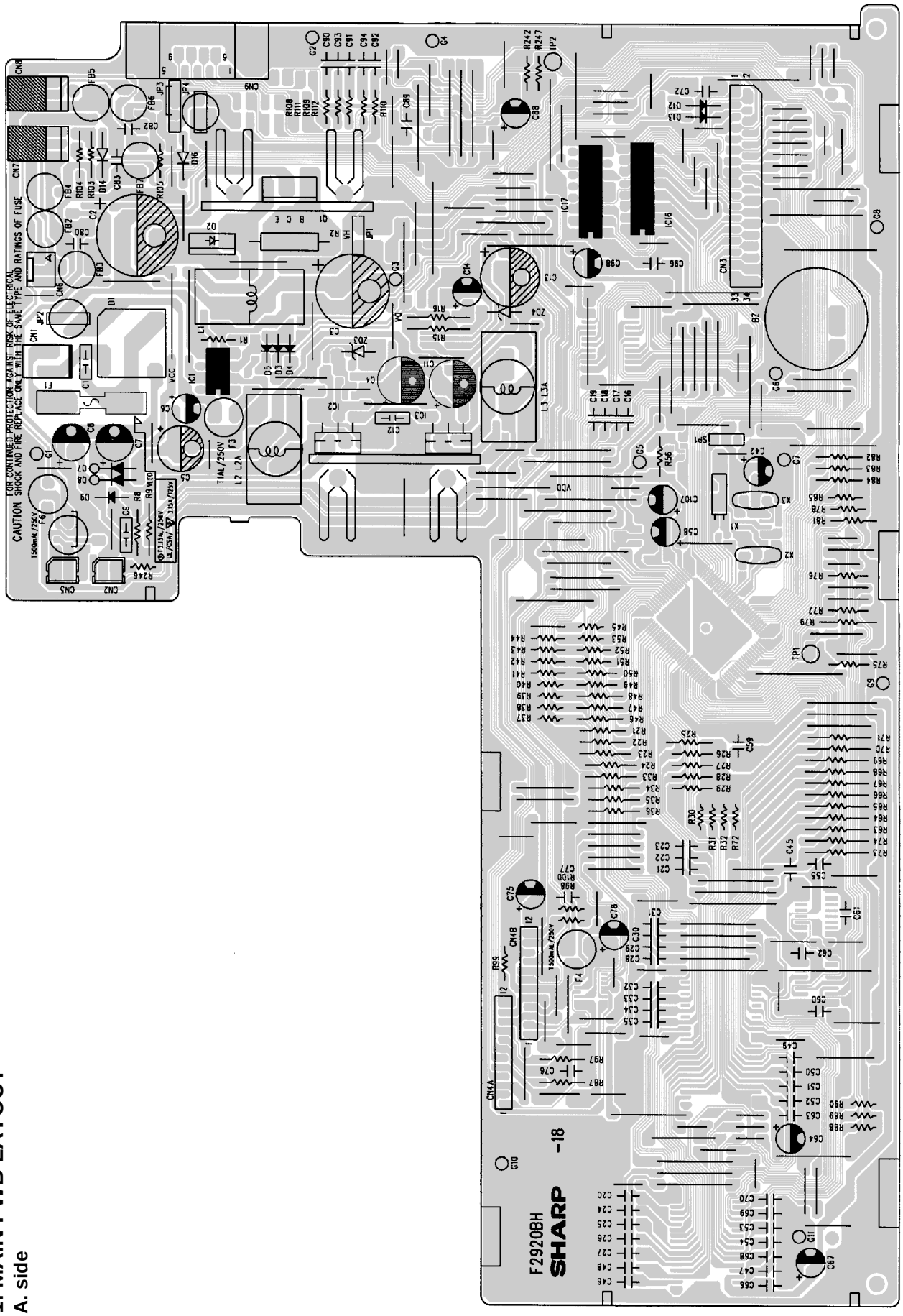

B. side

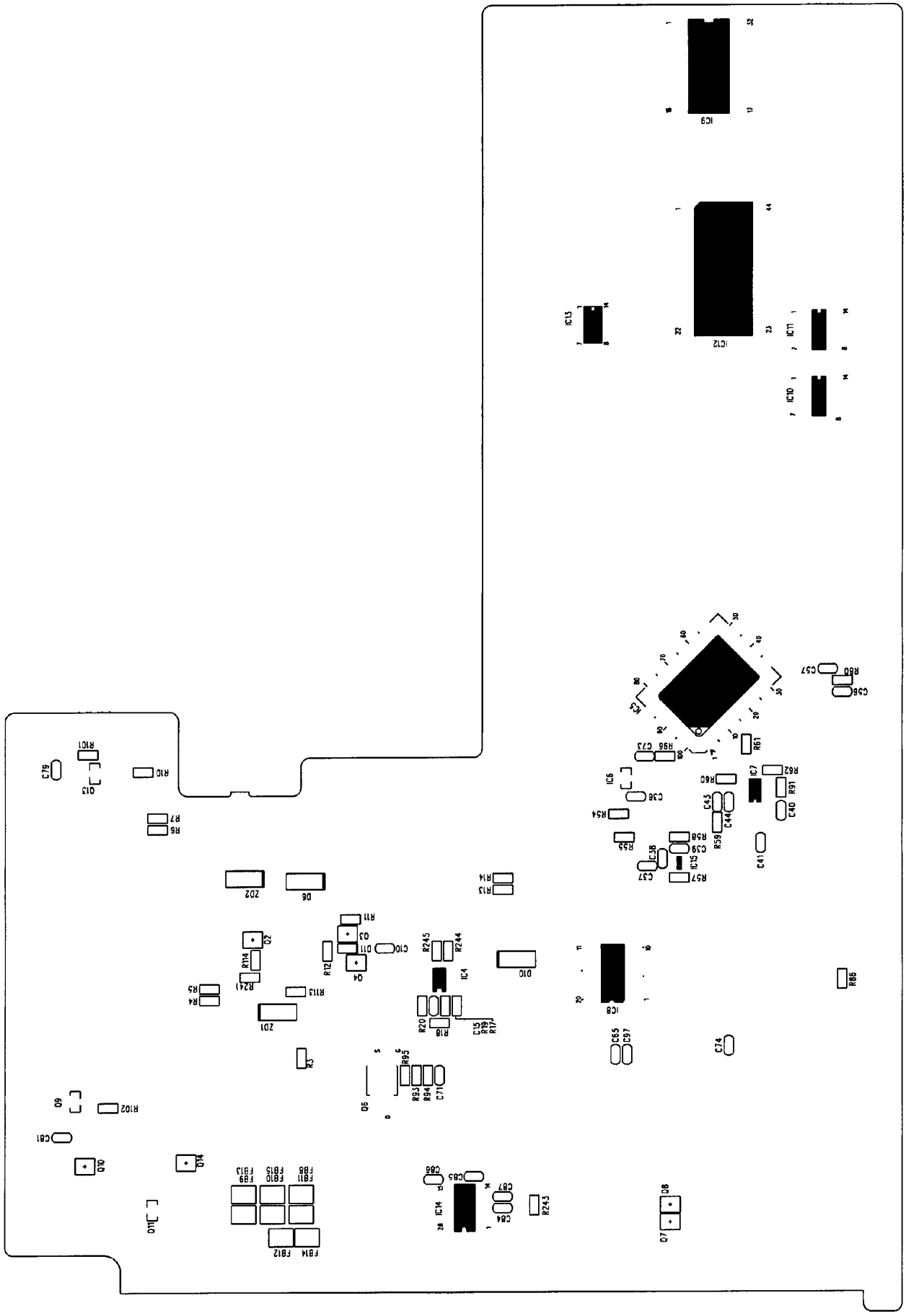

2. KEY INTERFACE PWB LAYOUT

A. side

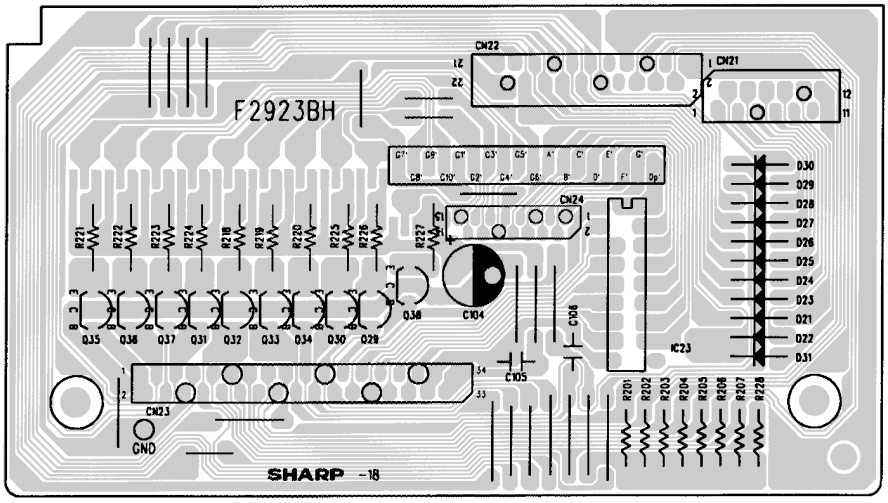

B. side

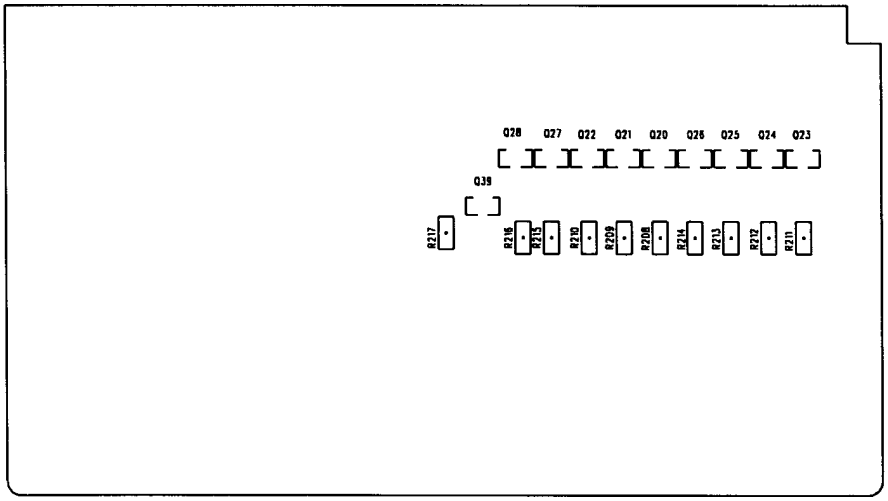

3. PRINTER I/F PWB LAYOUT

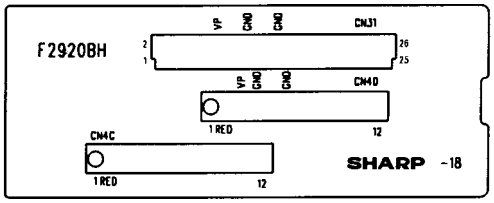

4. REAR DISPLAY PWB LAYOUT

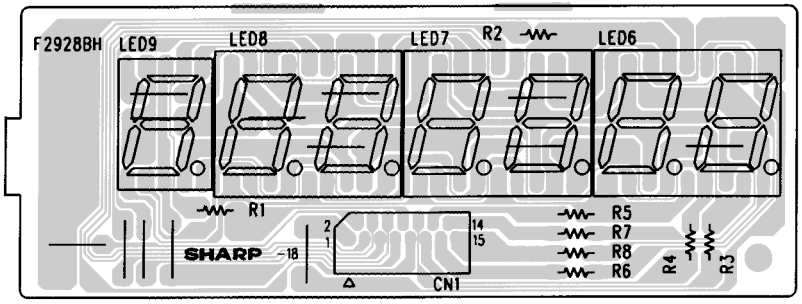

5. DISPLAY PWB LAYOUT

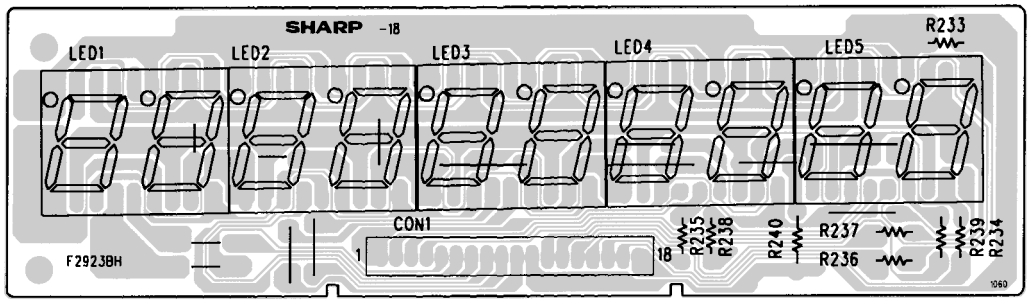

SHARP

COPYRIGHT © 2003 BY SHARP CORPORATION

All rights reserved.
Printed in Japan.
No part of this publication may be reproduced,
stored in a retrieval system, or transmitted.
In any form or by any means,
electronic, mechanical, photocopying, recording, or otherwise,
without prior written permission of the publisher.

SHARP CORPORATION
Digital Document Systems Group
Products Quality Assurance Department
Yamatokoriyama, Nara 639-1186, Japan
2003 August Printed in Japan ⓣ